Western Products, PO Box 245038, Milwaukee, WI 53224-9538 • www.westernplows.com

November 15, 2023
Lit. No. 74337, Rev. 08

MD UTV Straight Blade

Hydraulic Lift and Angle

Blade Assembly 74365, 74872
Hydraulic Lift Attachment 87515
Control Kit (including cables) 90180

Parts List and Accessories

A DIVISION OF DOUGLAS DYNAMICS, LLC

TABLE OF CONTENTS

IMPACT™ MID-DUTY UTV STRAIGHT BLADE ASSEMBLY 4

HEADGEAR, LINK ARMS & ANGLE FRAME ASSEMBLY 6

HYDRAULIC COMPONENTS 8

Hydraulic Unit 8

Lift and Angle Rams 10

Hoses and Fittings 10

VEHICLE-SIDE HARNESS DIAGRAM 11

Blade Components and Accessories

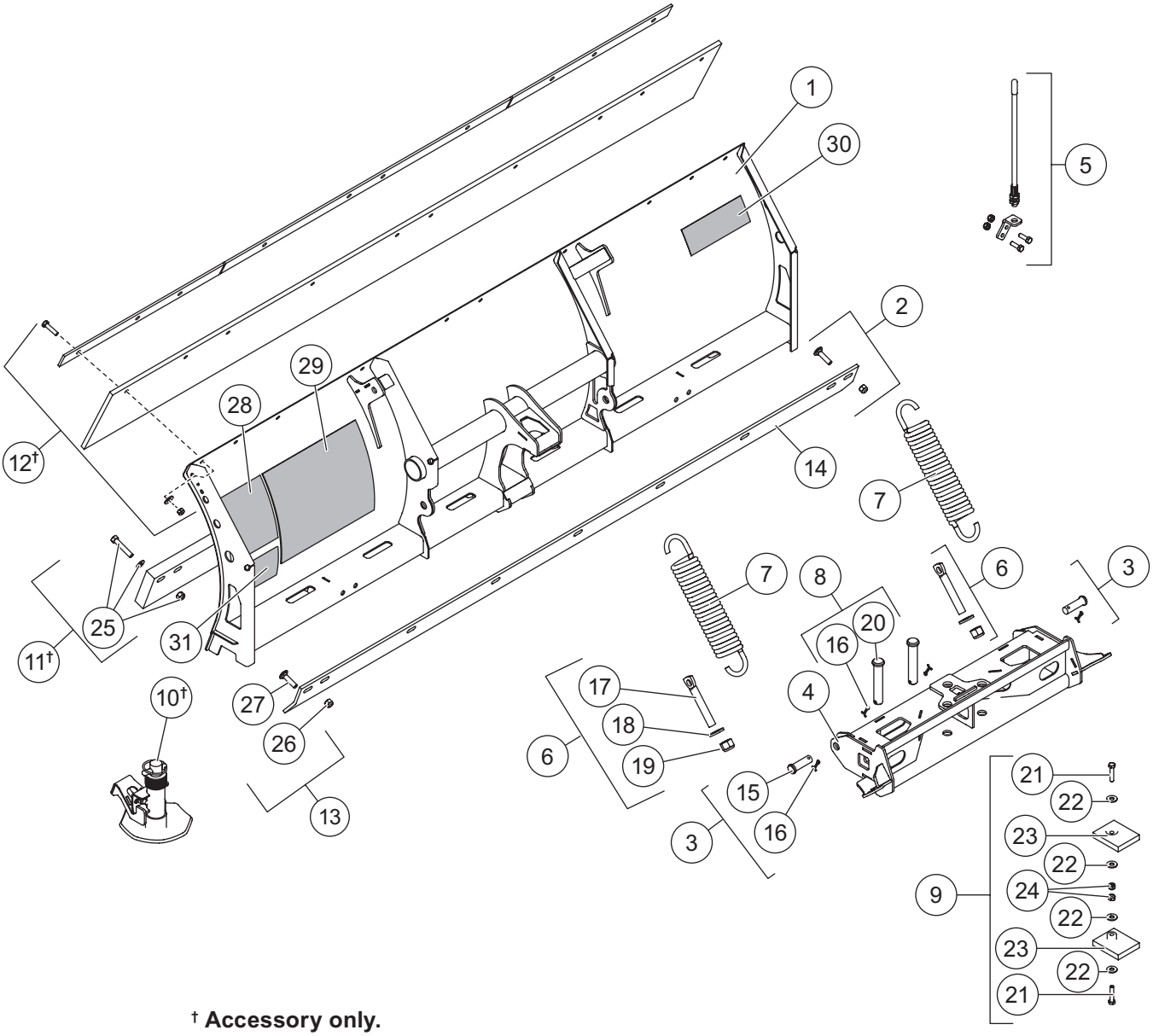

† **Accessory only.**

IMPACT™ Mid-Duty UTV Straight Blade Components							
Item	**Part**	**Qty**	**Description**	**Item**	**Part**	**Qty**	**Description**
1	80121	1	MD UTV Blade (5'6") with Labels	9	76887	1	Rubber Bumper Kit
	80119	1	MD UTV Blade (6') with Labels	10†	74239	1	Shoe Assembly Kit (2 shoes per kit)
2	91290	1	1/4 Steel Cutting Edge Kit (5'6")	11†	91210	1	Poly Cutting Edge Kit (5'6")
	91295		1/4 Steel Cutting Edge Kit (6')		91215	1	Poly Cutting Edge Kit (6')
3	50651	2	Clevis Pin Kit w/Cotter (blade to quad)	ns	78516†	1	3/8 Steel Cutting Edge Kit (5'6")
4	80308	1	Quadrant		78517†	1	3/8 Steel Cutting Edge Kit (6')
5	74222	1	Blade Guide Kit	12†	91240	1	Rubber Deflector Kit (5'6")
6	84702	2	Eyebolt Kit		84986	1	Rubber Deflector Kit (6')
7	B61167	2	Trip Spring	ns	76876	1	Blade Label Kit
8	76886	2	Pivot Pin Kit (for link arms)				
Item 2			**91290 (5'6") / 91295 (6') 1/4 Steel Cutting Edge Kit**				
13	91310	1	Cutting Edge Bolt Bag	14		1	1/4 Steel Cutting Edge
Item 3			**50651 Clevis Pin Kit w/Cotter**				
15		1	5/8 x 2 Clevis Pin	16		1	5/32 x 1-1/2 Cotter Pin
Item 6			**84702 Eyebolt Kit**				
17		1	5/8-11 x 4 Eyebolt	19		1	5/8-11 Hex Locknut GB
18		1	5/8 Hardened Flat Washer				
Item 8			**76886 Pivot Pin Kit (for link arms)**				
16		1	5/32 x 1-1/2 Cotter Pin	20	66950	1	3/4 x 4 Clevis Pin
Item 9			**76887 Rubber Bumper Kit**				
21		2	5/16-18 x 1-1/2 Hex Cap Screw G5	23	27615	2	Rubber Bumper
22		4	5/16 Flat Washer	24		2	5/16-18 Hex Locknut GB
Item 11†			**91210 (5'6") / 91215 (6') Poly Cutting Edge Kit**				
		1	Poly Cutting Edge	25	91270	1	Bolt Bag
Item 13			**91310 Cutting Edge Bolt Bag**				
26		9	3/8-16 Hex Locknut GB	27		9	3/8-16 x 1-1/2 Carriage Bolt G5
Item 25			**91270 Bolt Bag**				
		9	3/8-16 Hex Locknut GB			9	3/8 Flat Washer
		9	3/8-16 x 2 Hex Cap Screw GB				
			78516† 3/8 Steel Cutting Edge Kit (5'6")				
	31267	1	3/8 Cutting Edge 5'6"	13	91310	1	Cutting Edge Bolt Bag
			78517† 3/8 Steel Cutting Edge Kit (6')				
	31298	1	3/8 Cutting Edge 6'	13	91310	1	Cutting Edge Bolt Bag
			76876 Blade Label Kit				
28	84847	1	Label – Warning/Caution, UTV	31	30496	1	Label – Warning, High Pressure Fluid
29	88706	1	Label – Attach/Detach, MD UTV	ns	84771	1	Label – Logo, IMPACT™
30	28404	1	Label – Logo, ULTRAFINISH™	ns	69489	1	Label – Logo, WESTERN®
			ns = not shown				G = Grade

† Accessory only.

Headgear, Link Arms & Angle Frame Components

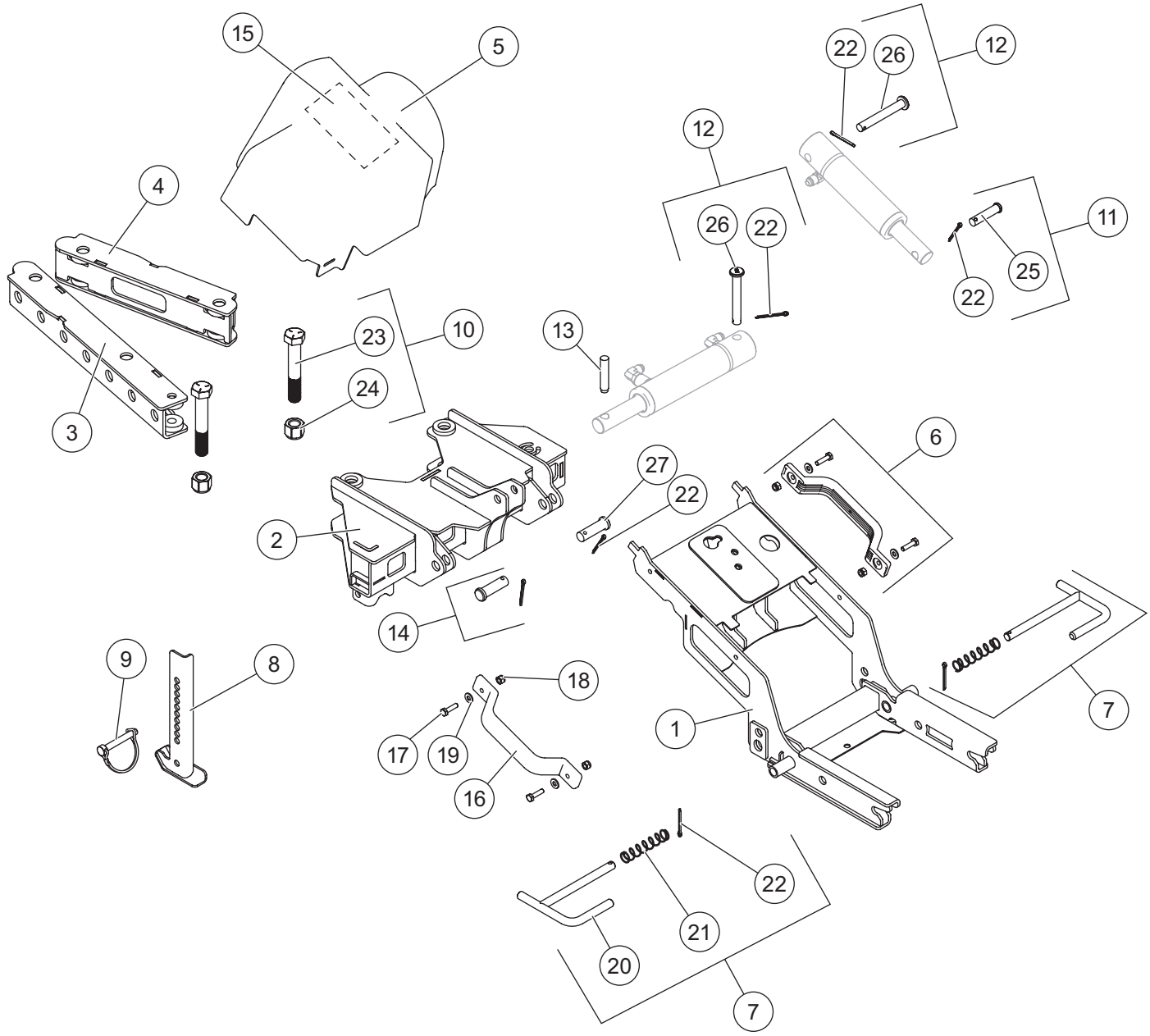

Mid-Duty UTV Straight Blade Headgear, Link Arms & Angle Frame Components							
Item	**Part**	**Qty**	**Description**	**Item**	**Part**	**Qty**	**Description**
1	81961	1	Headgear	9	77650	1	Wire-Lock Clevis Pin
2	81692	1	Angle Frame	10	81969	2	Link Arm Bolt Kit
3	81963	1	Drive Link Arm	11	76808	1	Pin Kit (for rod end of lift ram)
4	81964	1	Swing Link Arm	12	76809	2	Pin Kit (for base end of both rams)
5	81965	1	Hydraulic Cover (incl. item 15)	13	91514	1	Link Pin (for rod end of angle ram)
6	81966	2	Handle Kit	14	84905	2	DD Pin Kit (angle frame to headgear)
7	81967	2	Pull Pin Assembly Kit	15	74506	1	Label – Information, Hydraulic Unit
8	81968	1	Jack Leg				
Item 6			**81966 Handle Kit**				
16	78534	1	Handle	18		2	1/4-20 Hex Locknut GB
17		2	1/4-20 x 1 Hex Cap Screw G5	19		2	1/4 Washer
Item 7			**81967 Pull Pin Assembly Kit**				
20		1	Pull Pin	22		1	Cotter Pin
21		1	Spring				
Item 10			**81969 Link Arm Bolt Kit**				
23		1	3/4-10 x 4-1/2 Hex Cap Screw G5	24		1	3/4-10 Locknut GB
Item 11			**76808 Pin Kit (for rod end of lift ram)**				
22		1	5/32 x 1-1/2 Cotter Pin	25		1	1/2 x 2-1/8 Clevis Pin HT
Item 12			**76809 Pin Kit (for base end of both rams)**				
22		1	5/32 x 1-1/2 Cotter Pin	26		1	1/2 x 3-11/16 Clevis Pin HT
Item 14			**84905 DD Pin Kit (angle frame to headgear)**				
22		1	5/32 x 1-1/2 Cotter Pin	27		1	5/8 x 2 Clevis Pin
			G = Grade				HT = Heat Treated

Hydraulic Unit Components

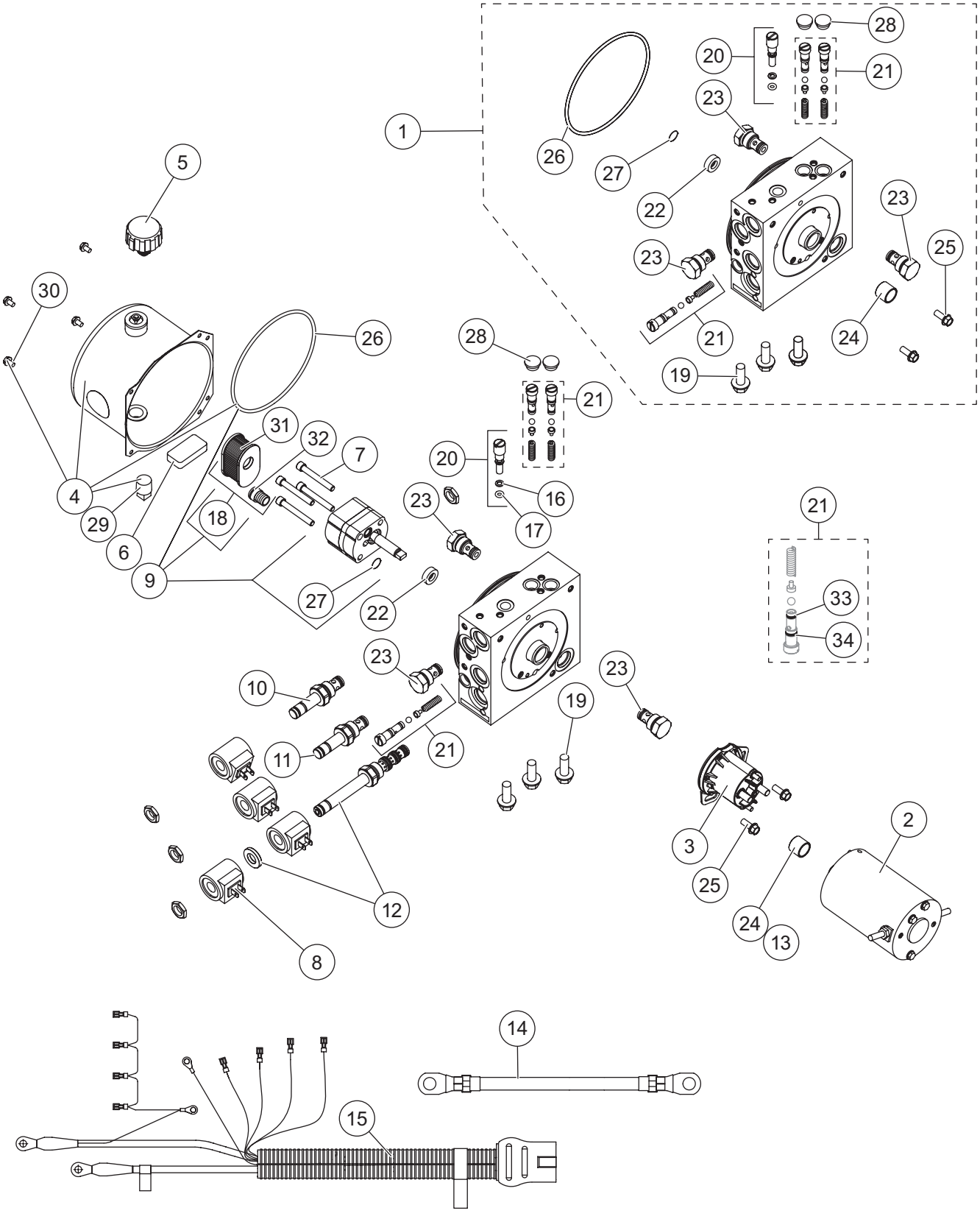

85499 Hydraulic Unit							
Item	**Part**	**Qty**	**Description**	**Item**	**Part**	**Qty**	**Description**
1	76977	1	Manifold Assembly w/o Valves	11	77099	1	Valve SV08-24 w/Nut
2	48543-1	1	Motor Assembly, 3"	12	52285	1	Valve 4-Way 3-Position Closed Center w/Nut and Spacer
3	52290	1	Motor Relay				
4	76978	1	Reservoir Kit	13	64596-1*†	1	Sleeve Bearing and Shaft Seal Kit
5	21727-2K	1	Breather, Pressure Control	14	29071	1	8" Cable
6	73897	1	Magnet	15	80202	1	Plow Cable Assembly
7	88916	4	1/4-20 x 2 Socket-Head Cap Screw	16	48240	1	Backup Ring -106
8	49230K-2	4	Coil w/Spade Terminals	17	48239	1	O-Ring -106
9	80300	1	Hydraulic Pump Kit	18	80307	1	Inlet Filter Kit
10	49227K-2	1	Valve 2-Way w/Nut				
Item 1			**76977 Primary Manifold w/o Valves**				
19	72384-1	1	3/8-16 x 1 Serrated Flange Hex Cap Screw (pkg of 3)	24	56364†	1	Bearing Sleeve
				25	44355	2	1/4-20 x 5/8 Hex Washer-Head Thread-Rolling Screw
20	48517	1	Quill				
21	49138K-5	2	Relief Valve Kit (2 sets)	26	66519	1	O-Ring 2-250
22	66515*	1	Pump Shaft Seal	27	25730	1	O-Ring -012
23	84934	3	Check Valve	28	56808	2	Plug
Item 4			**76978 Reservoir Kit**				
	–	1	Reservoir	29	92079	1	Plug, Square 3/8 NPTF
26	66519	1	O-Ring 2-250	30	66607	4	#10-24 x 5/16 Machine Screw
Item 9			**80300 Hydraulic Pump Kit**				
	–	1	Pump, Hydraulic	31	56789-5	1	Suction Filter
26	66519	1	O-Ring 2-250	32	10887	1	Hydraulic Pump Inlet Fitting
27	25730	1	O-Ring -012				
Item 21			**49138K-5 Relief Valve Kit (2 sets)**				
	–	2	Relief Valve Assembly	34	25731	2	O-Ring -010
33	55371	2	O-Ring -008				
O-Ring Service Kits							
ns	52298-3	–	O-Ring Kit	ns	49259-2	–	Seal Kit Cartridge 3-Way and 4-Way Valve
ns	49258-2	–	Seal Kit 2-Way Valve				
ns = not shown							G = Grade

* Use 28856 tool for pump shaft seal replacement (includes 1 seal).

† Use 64589 tool for bearing sleeve replacement (includes 1 bearing).

Go to *www.westernplows.com* for hydraulic unit service information and specifications.

Lift and Angle Ram Components

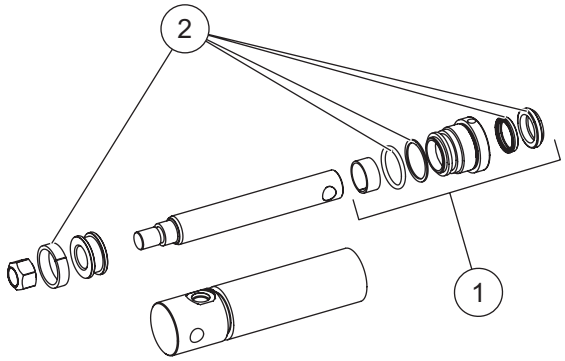

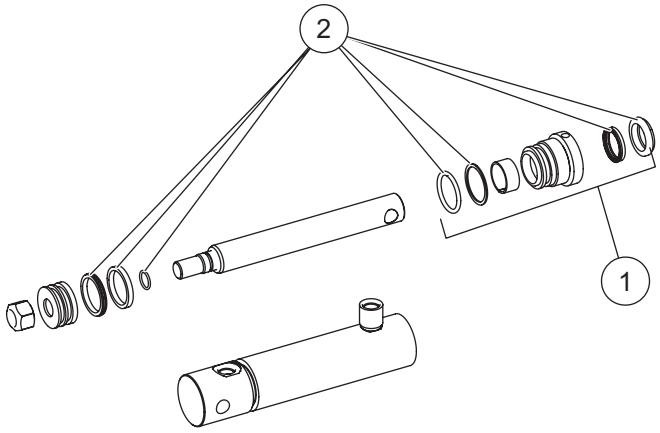

31653 Lift Ram Assembly 1-1/2 x 3			
Item	**Part**	**Qty**	**Description**
1	92964	1	1" Gland Nut Assembly
2	92965	1	Seal Kit 1-1/2 SA Ram

31654 Angle Ram Assembly 1-1/2 x 4 DA			
Item	**Part**	**Qty**	**Description**
1	92964	1	1" Gland Nut Assembly
2	96275	1	Seal Kit 1-1/2 DA Ram

Hoses and Fittings

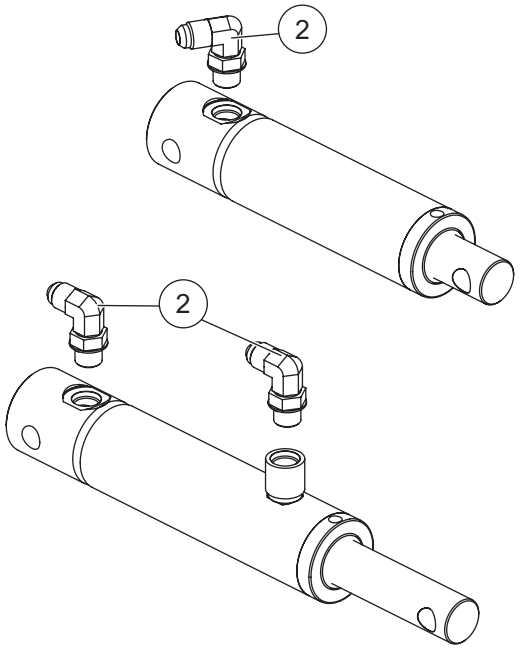

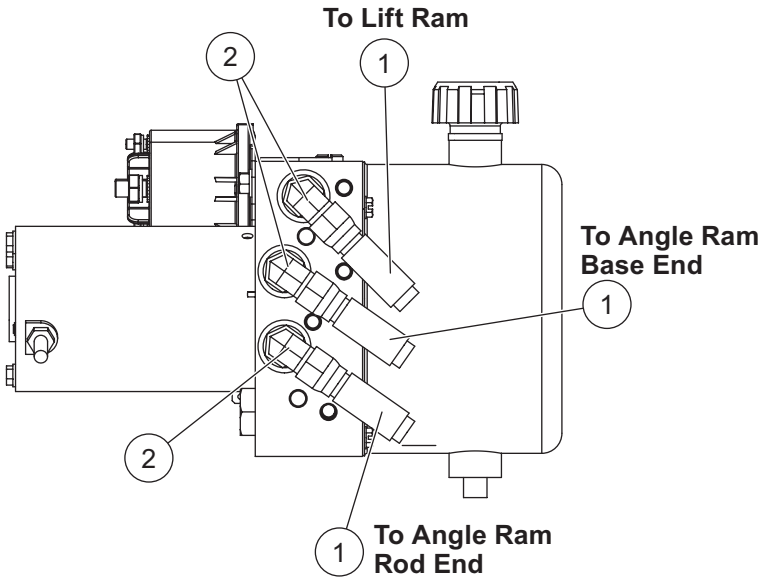

Hoses and Fittings							
Item	**Part**	**Qty**	**Description**	**Item**	**Part**	**Qty**	**Description**
1	84453	3	Hose, 1/4 x 20 w/F JIC Ends	ns	56823	1	Hose Wrap
2	56615-1	6	Elbow, 90° –6 M JIC/–6 M ORB				
F = Female			ns = not shown				M = Male

Vehicle-Side Harness Diagram

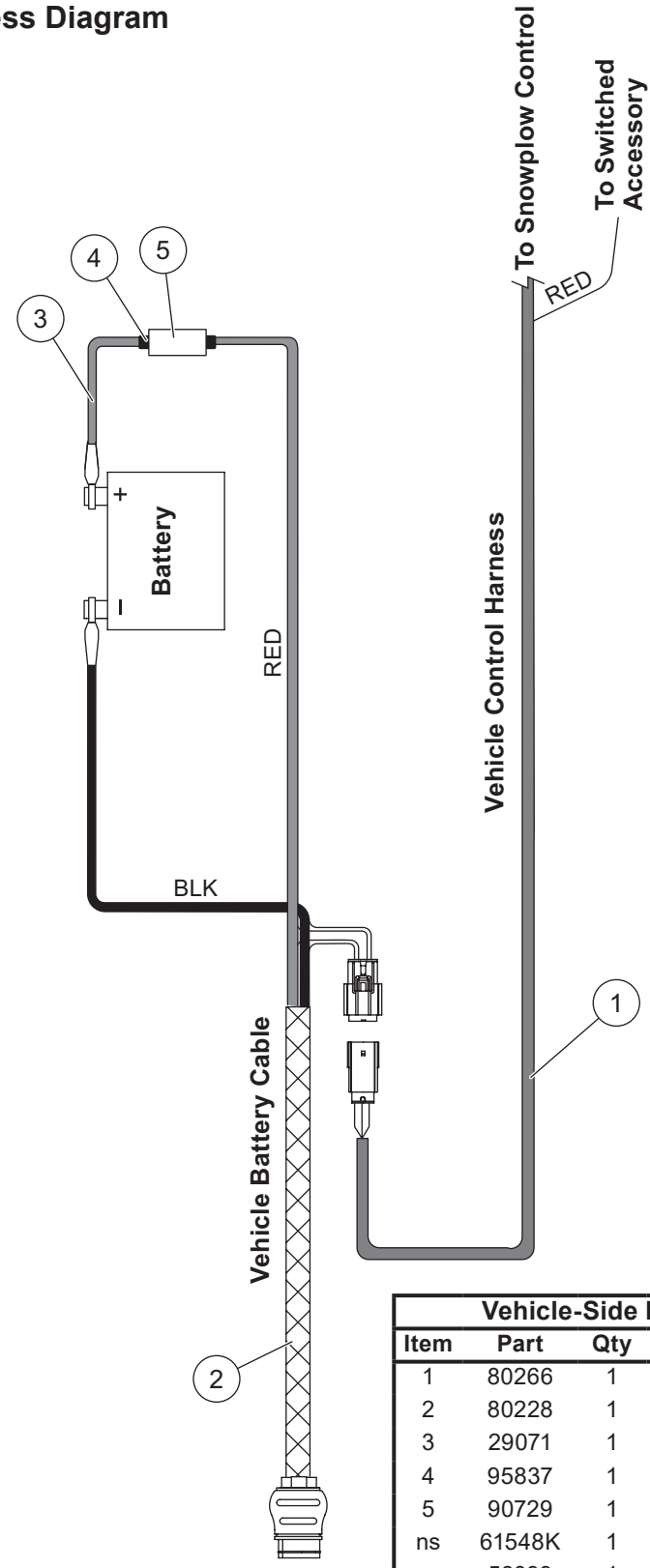

Vehicle-Side Electrical Components			
Item	**Part**	**Qty**	**Description**
1	80266	1	Vehicle Control Harness
2	80228	1	Vehicle Battery Cable
3	29071	1	8" Cable
4	95837	1	Fuse Holder
5	90729	1	200A Fuse
ns	61548K	1	Plug Cover (pkg of 2)
ns	56099	1	Dielectric Grease
ns = not shown			

Mid-Duty UTV Control Kit

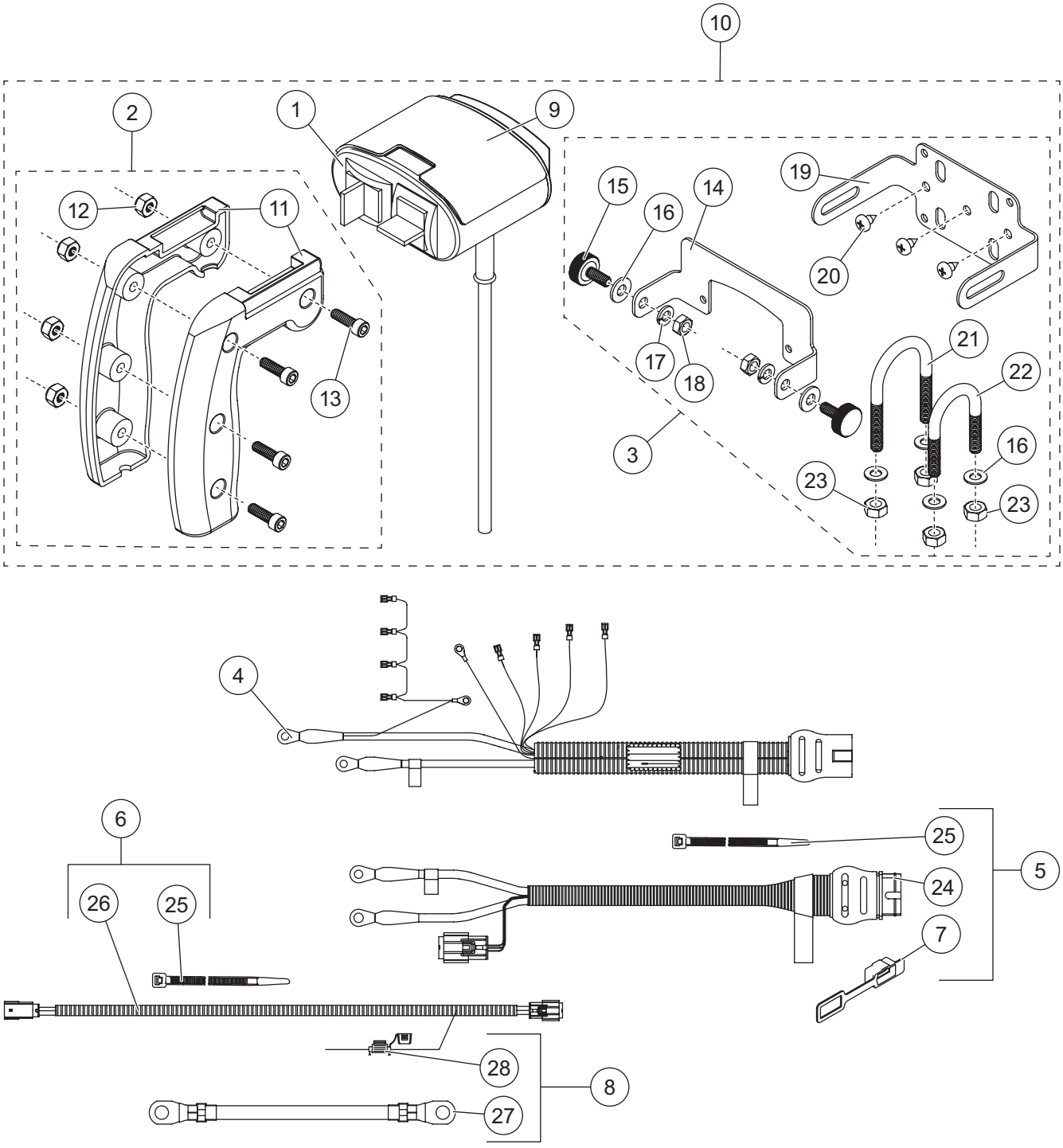

90180 Snowplow Control Kit, Mid-Duty UTV							
Item	**Part**	**Qty**	**Description**	**Item**	**Part**	**Qty**	**Description**
1	90125	1	Hand-Held Control, Mid-Duty UTV (incl. item 9)	6	80266	1	Control Cable Assembly
				7	99759	1	8-Pin Plug Cover
2	90115	1	Handle Grip Housing Kit	8	90730	1	200A Fuse Kit
3	90150	1	Bracket Kit, UTV Snowplow Control	9	77669	1	Label – Faceplate, MD UTV Control
4	80202	1	Snowplow Cable Assembly	10	97180	1	Snowplow Control Kit, Mid-Duty UTV
5	80228	1	Vehicle Cable Assembly				
Item 2			**90115 Handle Grip Housing Kit**				
11	91468	1	Handle Housing (2 halves)	13		4	#10-24 x 5/8 Socket Head Cap Screw SS
12		4	#10-24 Hex Locknut GB SS				
Item 3			**90150 Bracket Kit, UTV Snowplow Control**				
14		1	Bracket – Control	19		1	Bracket – Mounting
15		2	1/4-20 x 5/8 Thumb Screw, Plastic	20		3	#10 PHST x 3/8 Tapping Screw SS
16		6	1/4 Flat Washer SS	21		1	1/4-20 x 1-1/4 x 2-1/4 RD U-Bolt SS
17		2	1/4 Lock Washer SS	22		1	1/4-20 x 1 x 1-3/4 RD U-Bolt SS
18		2	1/4-20 Hex Nut SS	23		4	1/4-20 Hex Locknut GB SS
Item 5			**80228 Vehicle Cable Assembly**				
7		1	8-Pin Plug Cover	25		10	Cable Tie, 15.35"
24		1	Vehicle Cable				
Item 6			**80266 Control Cable Assembly**				
25		5	Cable Tie, 15.35"	ns		1	Splice (pkg of 5)
26		1	Control Cable	ns		1	Heatshrink Tubing
Item 8			**90730 200A Fuse Kit**				
27		1	Cable Assembly, 8"	ns		1	200A Mega Fuse
28		1	Fuse Holder				
Item 10			**97180 Snowplow Control Kit, Mid-Duty UTV**				
1	90125	1	Hand-Held Control, Mid-Duty UTV	3	90150	1	Bracket Kit, UTV Snowplow Control
2	90115	1	Handle Grip Housing Kit	9	77669	1	Label – Faceplate, MD UTV Control
ns = not shown			SS = Stainless Steel				G = Grade

Western Products
PO Box 245038
Milwaukee, WI 53224-9538
www.westernplows.com

A DIVISION OF DOUGLAS DYNAMICS, LLC

Copyright © 2023 Douglas Dynamics, LLC. All rights reserved. This material may not be reproduced or copied, in whole or in part, in any printed, mechanical, electronic, film or other distribution and storage media, without the written consent of Western Products. Authorization to photocopy items for internal or personal use by Western Products outlets or snowplow owner is granted.

Western Products reserves the right under its product improvement policy to change construction or design details and furnish equipment when so altered without reference to illustrations or specifications used. Western Products or the vehicle manufacturer may require or recommend optional equipment for snow removal. Do not exceed vehicle ratings with a snowplow. Western Products offers a limited warranty for all snowplows and accessories. See separately printed page for this important information. The following are registered (®) or unregistered (™) trademarks of Douglas Dynamics, LLC: IMPACT™, ULTRAFINISH™, WESTERN®.

Printed in U.S.A.